METAL WORK PNEUMATIC

DISTRIBUTORS

FIELDBUS
CM CLEVER MULTIMACH

METAL WORK PNEUMATIC

THE VALVE IN DETAIL

Clever Multimach valves can be used to form autonomous and intelligent valve island subsystems. Each valve has a microchip that performs a series of functions connected with operation and dialogue with the valves before and after it. Valves communicate via serial transmission. CM refers to the communication protocol patented by Metal Work.
It is a field-bus in its own right, designed specifically for very easy control of islands of pneumatic solenoid valves. CM valves have a diagnosis system that detects electrical faults. It can also be used to verify during installation that all connections are correct.
Multi-pole connections and field buses with different communication protocols are available for controlling the valve distribution island.
Addressing of single outputs is not required as the connection number of each solenoid pilot is assigned automatically based on the position occupied by the valve.

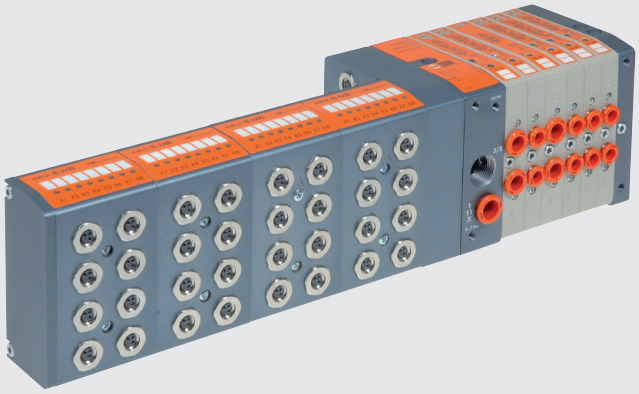

SMART VALVE

Each valve comes with a microchip that controls operation and dialogue with the other valves.

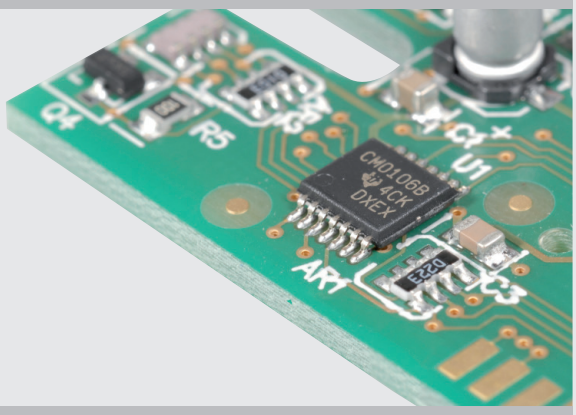

LOCAL DIAGNOSTICS

Each Clever Multimach valve has a LED diagnostic system that identifies immediately whether a pilot is energized, the contact is interrupted or there is a short-circuit.

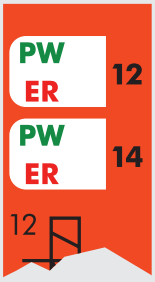

LED 14	LED 12	DESCRIPTION OF THE FAUL
OFF ○	**OFF** ○	No fault, EV1-EV2=OFF
ON (green) ●	**OFF** ○	No fault, EV1=ON - EV2=OFF
ON (green) ●	**ON** (green) ●	No fault, EV1-EV2=ON
OFF ○	**ON** (green) ●	No fault, EV1=OFF - EV2=ON
RED (flashing) ☀	**OFF** ○	Solenoid pilot EV1 interrupted or disconnected
OFF ○	**RED** (flashing) ☀	Solenoid pilot EV2 interrupted or disconnected
ON (red) ●	**OFF** ○	Solenoid pilot EV1 short circuit
OFF ○	**ON** (red) ●	Solenoid pilot EV2 short circuit
GREEN (flashing) ☀	**OFF** ○	Data update time out, communication faulty

INPUT MODULES

With a suitably arranged Clever Center, you can insert add-on modules.
When connecting buses, the add-on modules can only be used for e PNP INPUTs.
With a multi-pole connection, the following INPUTs and OUTPUTs can be used:
- DIGITAL INPUTS, as cylinder sensors for example
- DIGITAL OUTPUTS
- ANALOGUE INPUTS (but the LEDs do not light up)
- ANALOGUE OUTPUTS (but the LEDs do not light up)

They can be combined, even on the same module. You can choose between PNP or NPN connections via a dip switch-type selector.
All the INPUTS/OUTPUTS must be the same type, i.e. all PNP or NPN.

MAXIMUM EXTENSION OF ADD-ON MODULES

Up to 4 modules can be connected, giving a total of 32 input signals.

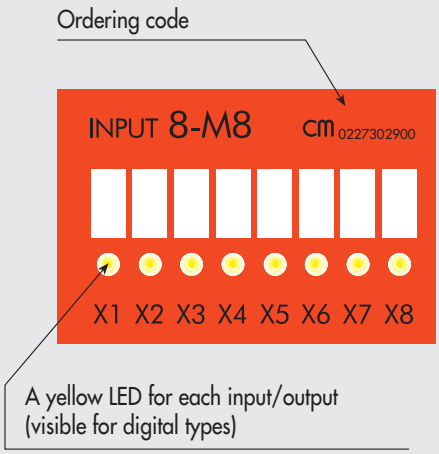

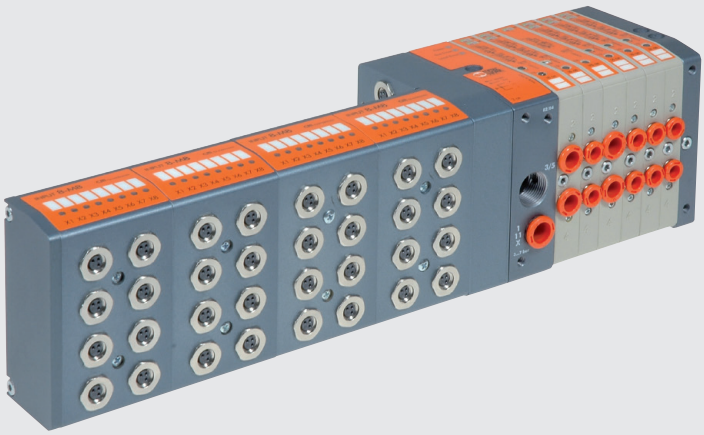

EXAMPLE OF A CM LAYOUT

The Clever Center can relay command signals to other islands of "slaves". Transmission, in serial mode, is via a cable with M8 connectors. Commands can be sent from the first slave island to other slave islands in cascade, again via cables with M8 connectors. Addresses are assigned automatically, based on intuitive sequential logic. This means that other slaves can be added downstream at any time, until all available outputs are in use.

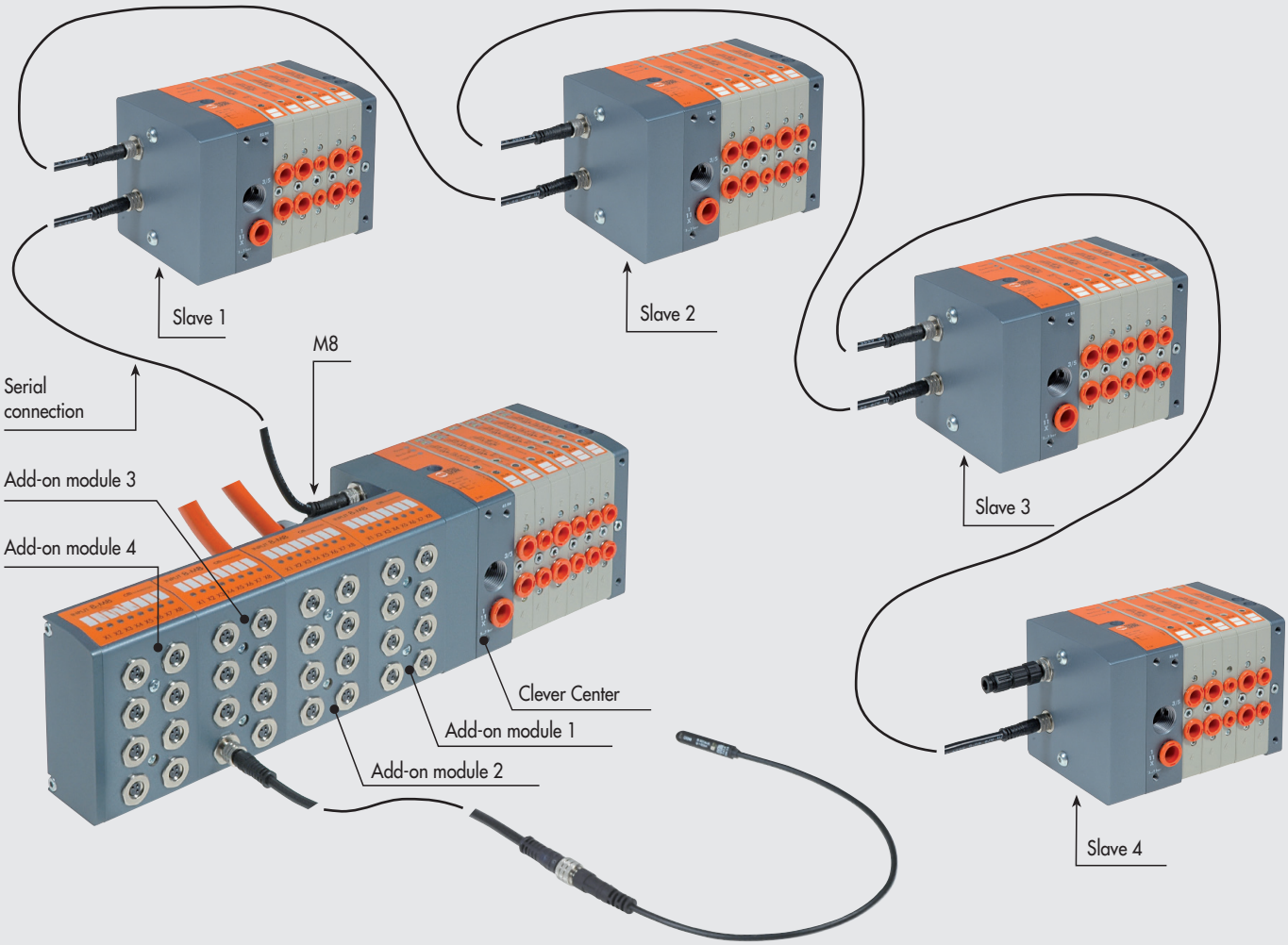

NOTES

TECHNICAL DATA

Valve port connections		Ø 4,6,8 mm automatic fitting for ports 2 and 4 / power supply port for Ø10 automatic fitting / 3/8 thread for exhaust port, M5 thread for exhaust pilot port		
Connection on the end-plate 1-11 for the supply of pilots		Automatic fitting Ø 4 mm		
Maximum number of pilots		See input end-plate technical data		
Maximum number of valves		See input end-plate technical data		
Operating temperature range	°C	-10 to +60		
Fluid		Filtered air without lubrication; lubrication, if used, must be continuous		
Flow rate at 6.3 bar ΔP 1 bar	Nl/min	11.5 mm Ø 4	11.5 mm Ø 6	14 mm Ø 8
	version 5/2 and 3/2	200	500	650
	version 5/3	200	300	300
Pressure range		X (pilot supply)		1-11 (valve supply)
	end-plate 1-11	3 to 7 bar		vacuum at 10 bar
	end-plate 1	3 to 7 bar		
Voltage range		24 VDC ±10%		
		(slave protected against overload and reverse polarity)		
Power for each pilot	W	0.9		
Solenoid Pilot Insulation class		F155		
Degree of protection		IP65 (with conveyed exhust, and that - in case of no use)		
Diagnostics and protections		Local via PC/PLC fault led. For defects signalled look at the manual.		
		Outlets protected against overload and short-circuit		
Solenoid rating		100% ED		
Maximum latency time of the serial transmission	ms	<10		
TRA/TRR 2x3/2 monostable at 6 bar	ms	8 / 45		
TRA/TRR 5/2 monostable at 6 bar	ms	8 / 33		
TRA/TRR 5/2 bistable at 6 bar	ms	20 / 20		
TRA/TRR 5/3 cc monostable at 6 bar	ms	20 / 20		
Note on use		Insert the pipes in the fittings, before passing air through the valves, otherwise the gasket may be pulled out of its seat by the flow of air.		
Compatibility with oils		Please refer to page 6-7 of the technical documentation see general catalogue		
Add-on module				
Sensor supply voltage		24 VDC ±10%		
Maximum current for each single connector	mA	200		
Maximum current for each module	mA	400		
Maximum total current of all the modules	mA	1000		
Input impedance	KΩ	3.9		
Max input voltage	Vcc	-5 to +30		
Type of input		With field bus: PNP		
		With multi-pole connection: PNP/NPN configurable via DIP SWITCH		
Protection		Protected inputs against overload and short-circuit		
Active input signalling		One LED for each INPUT		

FIXING THE BASE

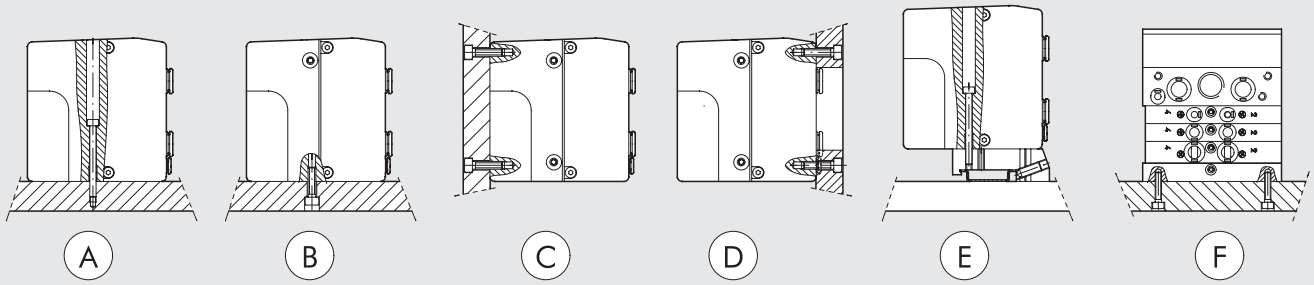

Ⓐ Fixing from above using the 1 or 1-1 input end-plate and the blind end-plate.
Ⓑ Ⓒ Fixing from above using the 1 or 1-1 input end-plate and the blind end-plate, using the M5 threads on the bottom and the rear of the end-plates.
Ⓓ Fixing from above using the 1 or 1-1 input end-plate and the blind end-plate, using the M5 threads on the front of the end-plates. An opening for the pipes is made in the plate.
Ⓔ Fixing on the DIN bar with end-plate 1 or 1-11 and blind end-plate, using the push-in bracket code 0227301600.
Ⓕ Lateral fixing using the blind end-plate, and its the M4 threads on the side lateral.
Note: The sole fixing admitted is the one showed.

KEY TO CODES – CLEVER MULTIMACH CM

C M	2	I / O	M	I6 - W8 - W6 - O4 - L8 - 5	M8 - M8 - 15 - 16
VALVE	**INPUT END-PLATE**	**FUNCTION**	**MANUAL TYPE**	**TYPE OF VALVE**	**FURTHER DETAILS**
Clever Multimach	**2** End-plate 1-11 **3** End-plate 1	**O** multi-pole connection, valves only **I/O** multi-pole connection, valves and inputs **ADD** Additional (slave) valves only **PN O** Profinet IO, valves only **PN I/O** Profinet IO, valves and inputs **EC O** EtherCAT, valves only **EC I/O** EtherCAT, valves and inputs ◆ **EN O** EtherNet, valves only ◆ **EN I/O** EtherNet, valves and inputs **CAN O** CANopen, valves only **CAN I/O** CANopen, valves and inputs	**M** Monostable manual control **B** Bistable manual control	**I** n° 2 3/2 NC **W** n° 2 3/2 NO **L** 3/2 NO + 3/2 NC **V** 5/2 monostable **K** 5/2 bistable **O** 5/3 monostable **5** Blind end-plate **6** Passing-intermede **7** Blind intermediate **20** Exhaust section **4** Cartridge 4 **6** Cartridge 6 **8** Cartridge 8	● **M8** Module 8 input M8 ✱ **14** Shell 44 pin ✱ **15** Shell 44 + 44 pin **16** n° 2 brackets for DIN bar

● Not applicable with (add-on) ADD end-plate
✱ For multi-pole connection only
◆ Not yet suppliable. Contact our sales departments.

NOTES

CM + MULTI-POLE CONNECTION

CM end-plates + multi-pole connection can be used for connection to the PC/PLC using a 44-pin cable and connector.
The end-plates with provisions for INPUT/OUTPUT add-on modules are connected using an extra 44-pin cable.
Both valves and INPUTs/OUTPUTs can be PNP or NPN configured.

TECHNICAL DATA

Maximum number of pilots		32
Maximum number of valves		32 (same as the max. no. of pilotos)
Voltage range		24VDC ±10%
DC input current without valve modules		Nominal Icc 30 mA - Instantaneous Icc (≤25 ms) 650 mA
Max input current with all valves ON	A	1.5

Refer to page 5 for general technical data

COMPONENTS

① Exhaust - Solenoid pilot 82/84
② Valve supply - port 1
③ Threaded connection of exhausts 3/5
④ Valve supply - port 11
⑤ Electrical control supply X
⑥ Blind end-plate
⑦ Screw for valve wall-mounting
⑧ ⑨ ⑩ Utility port for pipe Ø 4, 6 or 8 mm
⑪ Manual control
⑫ LED (LED on, solenoid valve energised)
⑬ Pneumatic symbol
⑭ Identification of the monostable or bistable manual control
⑮ Valve ordering code
⑯ Valve identification code
⑰ Blank space for valve number
⑱ Clever Center end-plate multi-pole connection

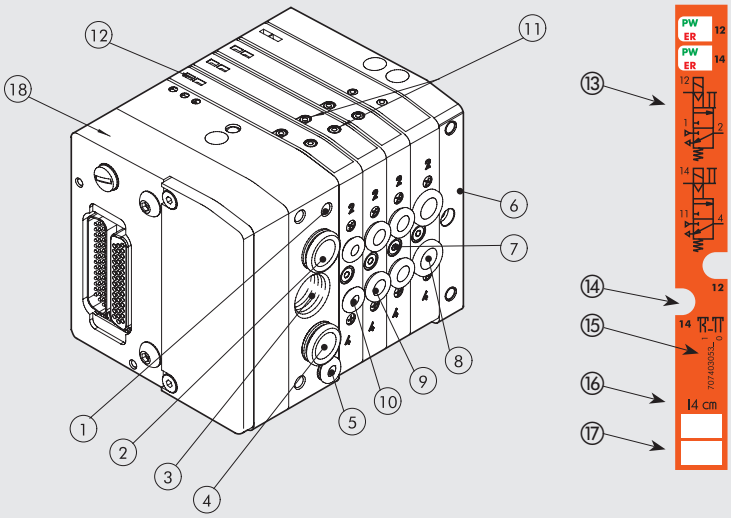

VALVE ISLAND CONFIGURATION

The numbers permit rapid identification of the function and assembly position of the single elements represented as follows.

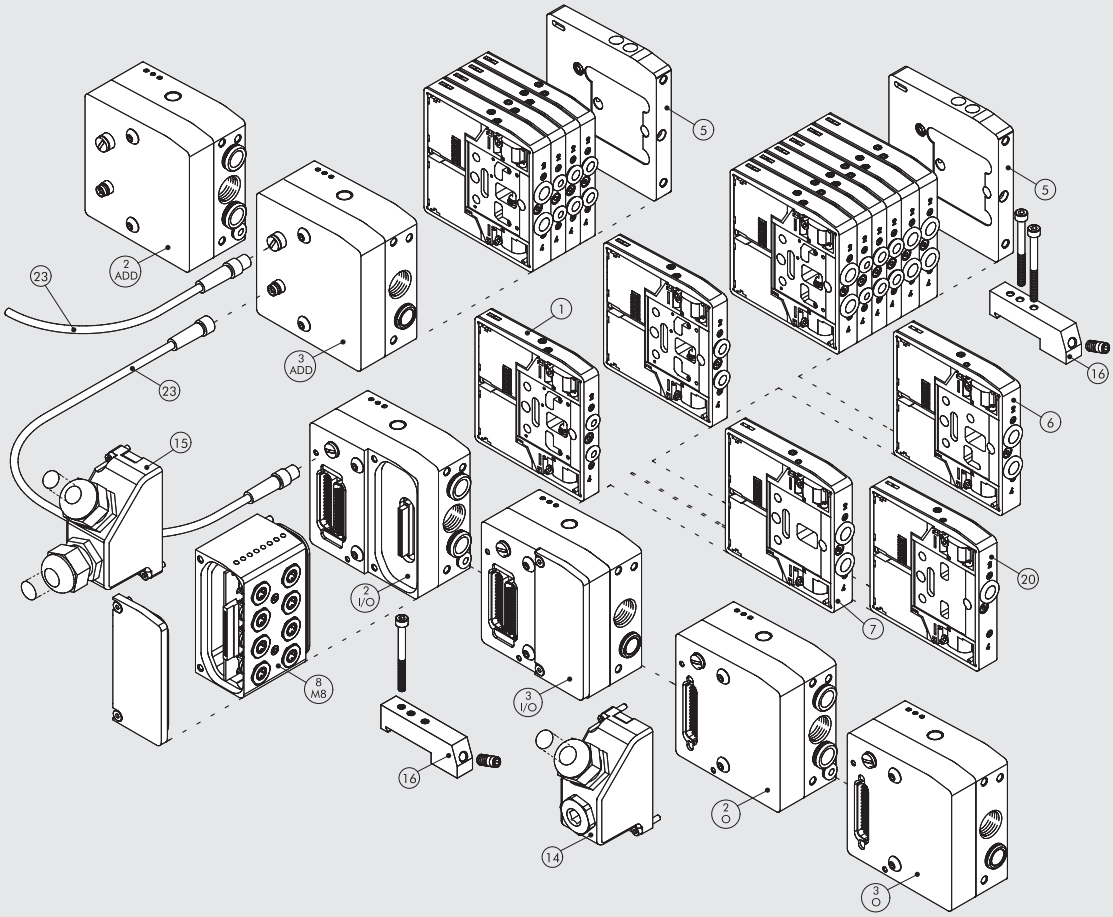

WIRING DIAGRAM FOR THE CLEVER CENTER TERMINAL - VALVES ONLY

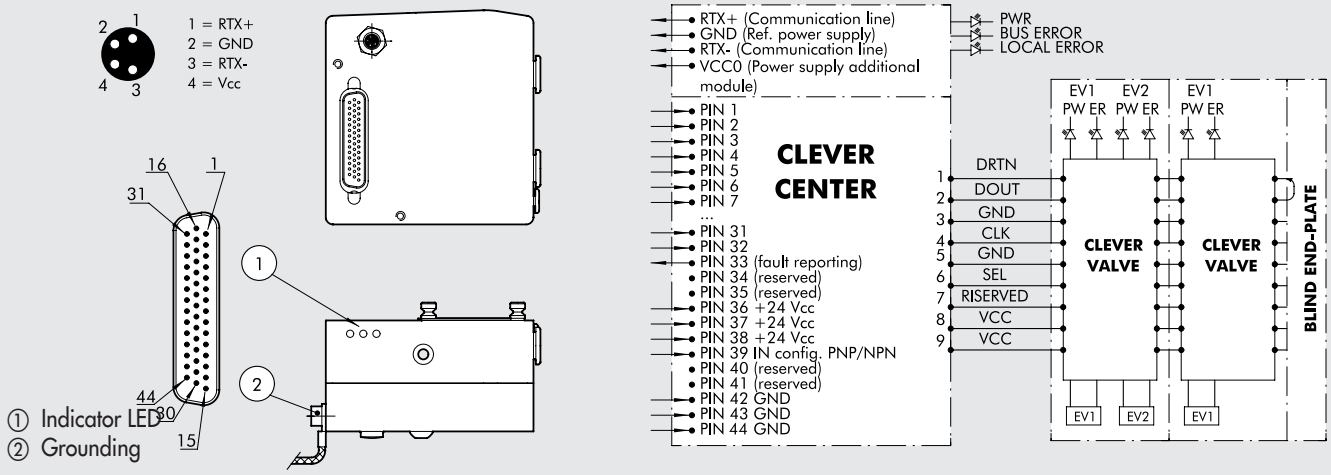

WIRING DIAGRAM FOR THE CLEVER CENTER TERMINAL FOR VALVES AND INPUTS/OUTPUTS

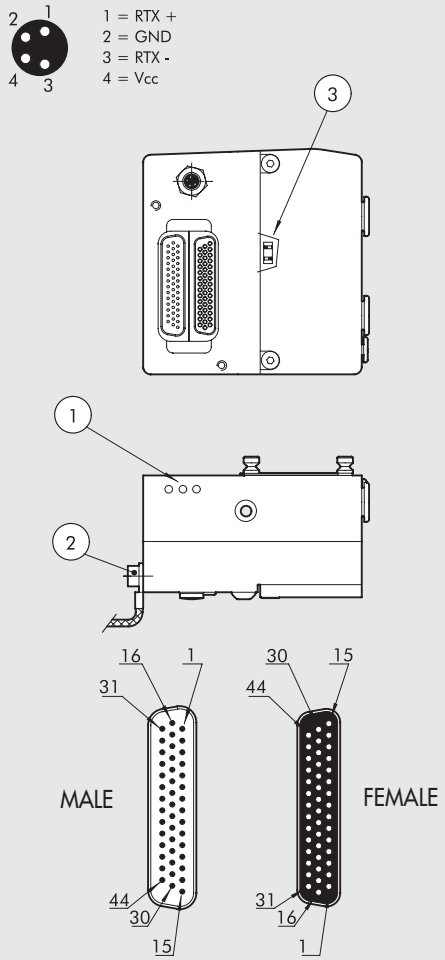

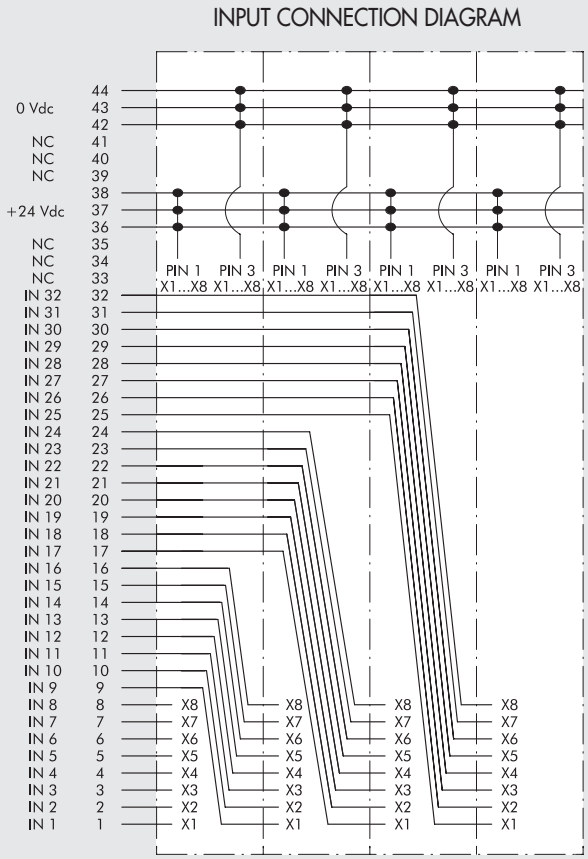

① Indicator LED
② Grounding
③ Input selector type PNP/NPN

2 - O OUTPUT END-PLATE 1-11

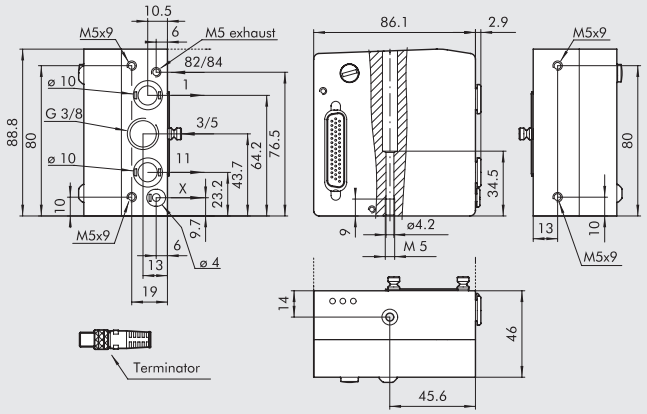

Code	Description	Weight [g]
0227302200	End-plate CM kit 1-11 OUT	722

This end-plate allows for supplies to be differentiated:
port 2, port 4 and pilot supply
Note: terminator included

3 - O OUTPUT END-PLATE 1

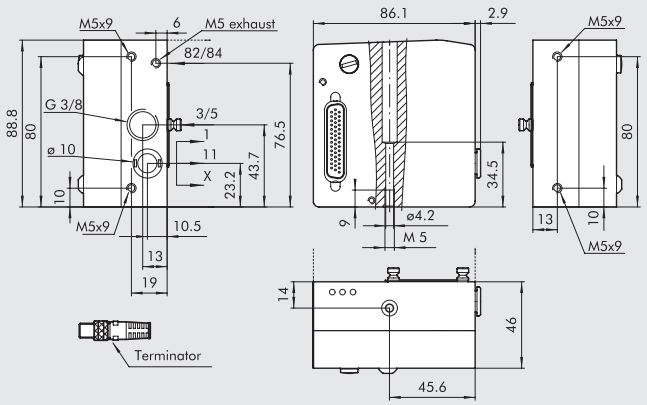

Code	Description	Weight [g]
0227302201	End-plate CM kit 1 OUT	722

Note: terminator included

2 - I/O INPUT/OUTPUT END-PLATE 1-11

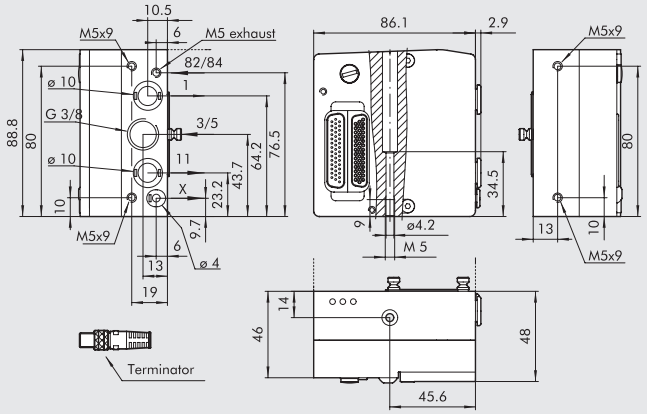

Code	Description	Weight [g]
0227302223	End-plate CM kit 1-11 IN/OUT	722

This end-plate allows for supplies to be differentiated:
port 2, port 4 and pilot supply
Note: terminator included

3 - I/O INPUT/OUTPUT END-PLATE 1

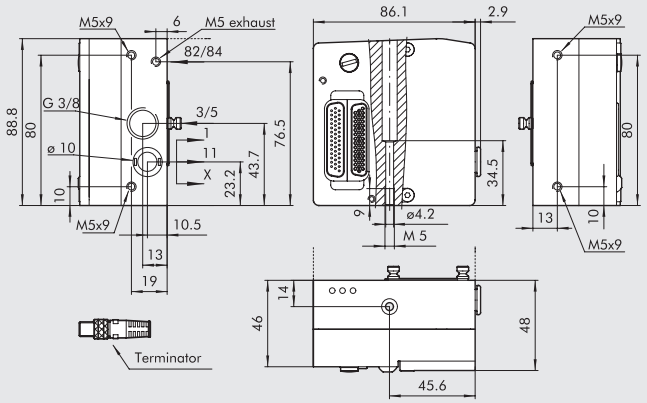

Code	Description	Weight [g]
0227302225	End-plate CM kit 1 IN/OUT	722

Note: terminator included

14 44-PIN CUP CONNECTOR KIT IP 65

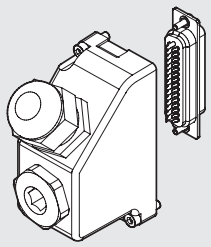

Code	Description	Weight [g]
0226180108	44-pin cup connector kit IP 65	60

15 44+44 PIN CUP CONNECTOR KIT IP 65 FOR I/O

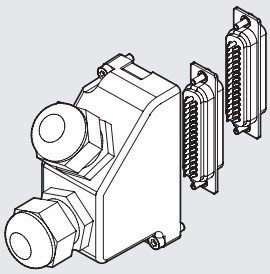

Code	Description	Weight [g]
0226180109	44+44 pin cup connector kit IP 65 for I/O	80

CABLES

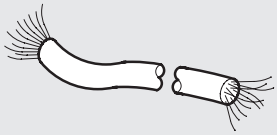

Code	Description	Weight [g/m]
0226107201	10-wire cable	86
0226107101	19-wire cable	122
0226107102	25-wire cable	130
0226107103	44-wire cable	160

Specify the number of metres desired

IDENTIFICATION PLATE KIT FOR 44-PIN CONNECTOR

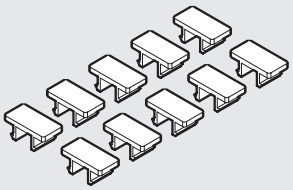

Code	Description
0226107000	Identification plate kit

Comes in 10-pc. packs

44-PIN PRE-WIRED CUP CONNECTOR

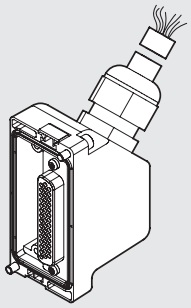

Code	Description	Weight [g]
0226950500	Connet. IP 65 + cable 44-wire L = 5 m	740

44+44-PIN PRE-WIRED CUP CONNECTOR

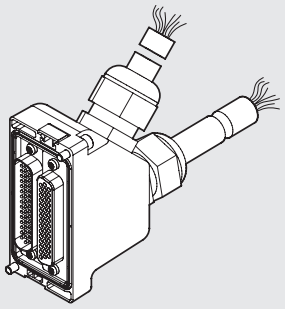

Code	Description	Weight [g]
0226980500	Connet. IP 65 + cable 44 + 44-wire L = 5 m	1550

WIRING DIAGRAM FOR THE 44-PIN CUP CONNECTOR KIT

44 PIN FEMALE PRE-WIRED FOR VALVE

Position of electrical contact	Corresponding wire colour	Function
1	white	Out 1
2	brown	Out 2
3	green	Out 3
4	yellow	Out 4
5	gray	Out 5
6	pink	Out 6
7	blue	Out 7
8	violet	Out 8
9	gray + pink ring	Out 9
10	red + blue ring	Out 10
11	white + green ring	Out 11
12	brown + green ring	Out 12
13	white + yellow ring	Out 13
14	yellow + brown ring	Out 14
15	white + gray ring	Out 15
16	gray + brown ring	Out 16
17	white + pink ring	Out 17
18	pink + brown ring	Out 18
19	white + blue ring	Out 19
20	brown + blue ring	Out 20
21	white + red ring	Out 21
22	brown + red ring	Out 22
23	white + black ring	Out 23
24	brown + black ring	Out 24
25	gray + green ring	Out 25
26	yellow + gray ring	Out 26
27	pink + green ring	Out 27
28	yellow + pink ring	Out 28
29	green + blue ring	Out 29
30	yellow + blue ring	Out 30
31	green + red ring	Out 31
32	yellow + red ring	Out 32
33	green + black ring	Fault reporting
34	gray + blue ring	NC
35	gray + red ring	NC
36	red + green ring	+24VDC
37	red + brown ring	+24VDC
38	red + black ring	+24VDC
39	yellow + black ring	Config. PNP/NPN
40	pink + red ring	NC
41	pink + blue ring	NC
42	black + green ring	0 VDC
43	black + pink ring	0 VDC
44	black + red ring	0 VDC

44 PIN MALE PRE-WIRED FOR INPUT/OUTPUT

Position of electrical contact	Corresponding wire colour	Function
1	white	In 1
2	brown	In 2
3	green	In 3
4	yellow	In 4
5	gray	In 5
6	pink	In 6
7	blue	In 7
8	violet	In 8
9	gray + pink ring	In 9
10	red + blue ring	In 10
11	white + green ring	In 11
12	brown + green ring	In 12
13	white + yellow ring	In 13
14	yellow + brown ring	In 14
15	white + gray ring	In 15
16	gray + brown ring	In 16
17	white + pink ring	In 17
18	pink + brown ring	In 18
19	white + blue ring	In 19
20	brown + blue ring	In 20
21	white + red ring	In 21
22	brown + red ring	In 22
23	white + black ring	In 23
24	brown + black ring	In 24
25	gray + green ring	In 25
26	yellow + gray ring	In 26
27	pink + green ring	In 27
28	yellow + pink ring	In 28
29	green + blue ring	In 29
30	yellow + blue ring	In 30
31	green + red ring	In 31
32	yellow + red ring	In 32
33	green + black ring	NC
34	gray + blue ring	NC
35	gray + red ring	NC
36	red + green ring	+24VDC
37	red + brown ring	+24VDC
38	red + black ring	+24VDC
39	yellow + black ring	NC
40	pink + red ring	NC
41	pink + blue ring	NC
42	black + green ring	0 VDC
43	black + pink ring	0 VDC
44	black + red ring	0 VDC

CM + Profinet IO

The CM + Profinet IO system has been designed with a pneumatic input end-plate that can contain all the electronic equipment, indicators and connectors. This system is very compact and sturdy and is housed in a thick aluminium body that protects sensitive components from impact and falls.
The end-plate is available in two electric versions: one handling up to 64 solenoids (64 OUTs) and one handling up to 64 solenoids (64 OUTs) and 32 inputs (32 INs).
Grounding is recommended to protect the electronic circuit against electric or electrostatic charges.
N.B. For the system to handle more than 32 pilots (33 to 64), it must be made up of valves bearing a label marked 64. If one or more valves are not marked 64, each island cannot handle more than 32 pilots.

TECHNICAL DATA	
Field buses	Profinet IO - 100 Mbit/s - Full-duplex
	Supports Fast Start Up, RT communication, Shared Device, Identification & Maintenance 1-4
Factory settings	Module name: Cmseries
	Address IP 0.0.0.0
Addressing	Software DCP
Voltage range	24VDC ± 10%
Maximum number of pilots (Out)	64
Maximum number of valves	64 (same as the max. no. of pilotos)
Maximum number of inputs (INs)	32
Icc bus supply current	Nominal Icc 120 mA - Instantaneous Icc (< 2 ms) 450 mA
Icc valve supply current	Instantaneous Icc (< 2 ms) 900 mA
Maximum absorption of a valve island with 64 monostable valves	Nominal Icc with 900 mA OFF valves – nominal Icc with 2700 mA ON valves
Protections	Module protected against overload and polarity reversal. Outputs protected against overloads and short-circuits
Connections	Field bus: 2 M12 Female, D-coded, internal switch
	supply: M8 4 pin
	input: M8 3 pin
BUS diagnostics	Using local LEDs and software messages
	Outputs: using local LEDs and status bytes
	Inputs: using local LEDs and status bytes
	N.B.: Refer to the user manual for a detailed description
Data bit value	0 = not enabled
	1 = enabled
Output status in the absence of communication	Disabled
See page 5 for general technical data	

COMPONENTS

① Exhaust - Solenoid pilot 82/84
② Valve supply - port 1
③ Threaded connection of exhausts 3/5
④ Valve supply - port 11
⑤ Electrical control supply X
⑥ Blind end-plate
⑦ Screw for valve wall-mounting
⑧ ⑨ ⑩ Utility port for pipe Ø 4, 6 or 8 mm
⑪ Manual control
⑫ LED (LED on, solenoid valve energised)
⑬ Pneumatic symbol
⑭ Identification of the monostable or bistable manual control
⑮ Valve ordering code
⑯ Valve identification code
⑰ Blank space for valve number
⑱ CM Profinet IO end-plate
⑲ 64 = when present, it means that the valve is suitable for installation on islands with a field bus with up to 64 pilots, otherwise the limit is 32 pilots.

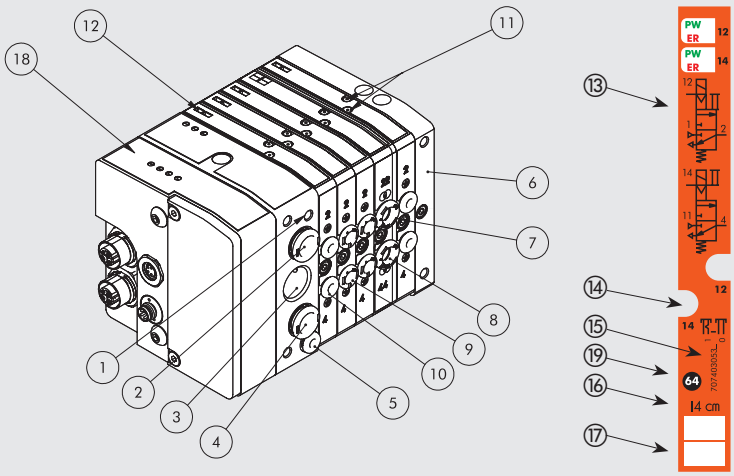

VALVE ISLAND CONFIGURATION

The numbers permit rapid identification of the function and assembly position of the single elements represented as follows.

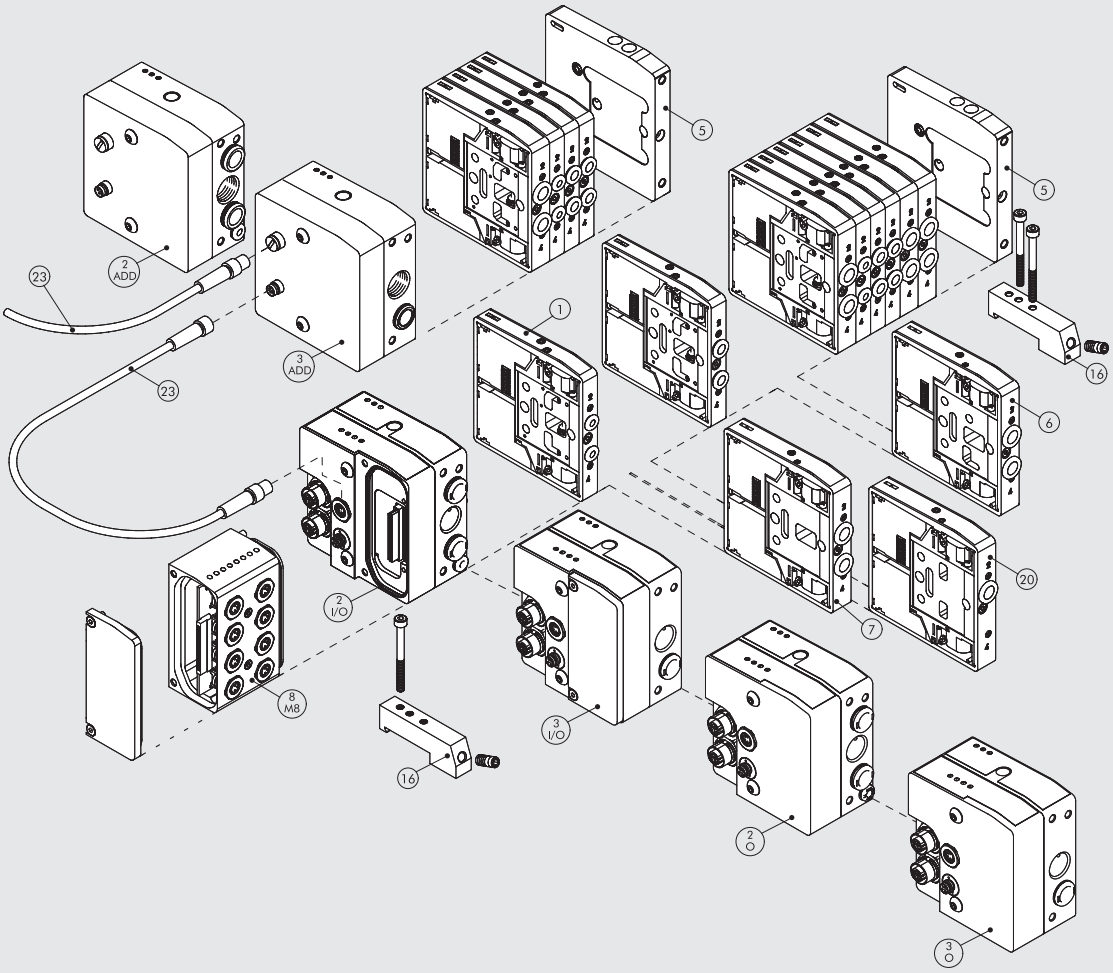

WIRING DIAGRAM

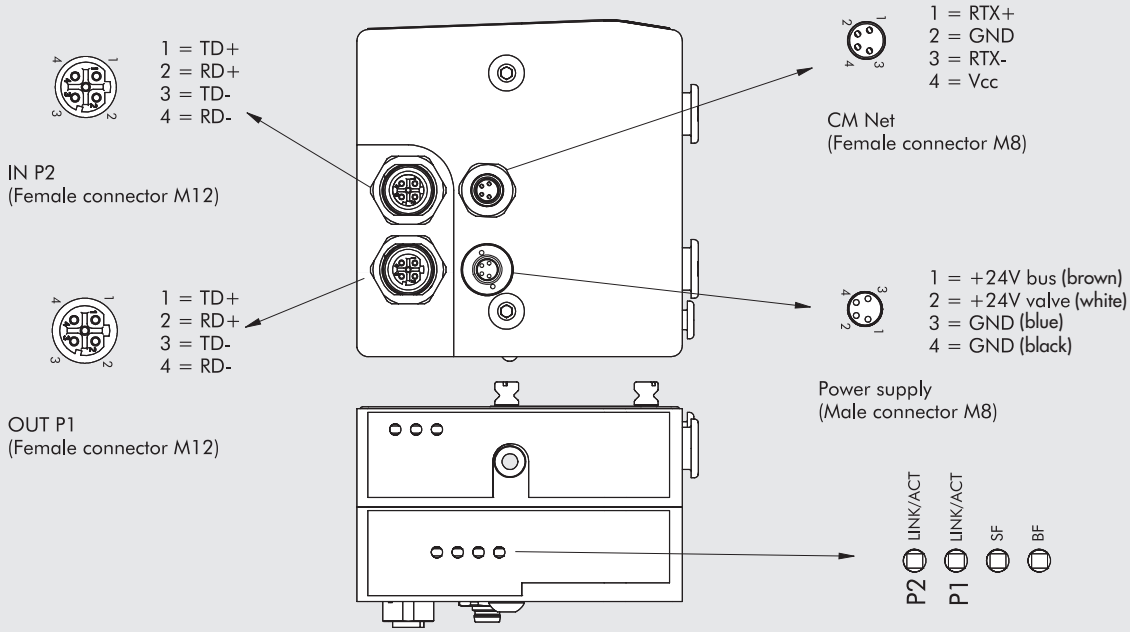

2 - O END-PLATE 1-11 Profinet IO OUTPUT

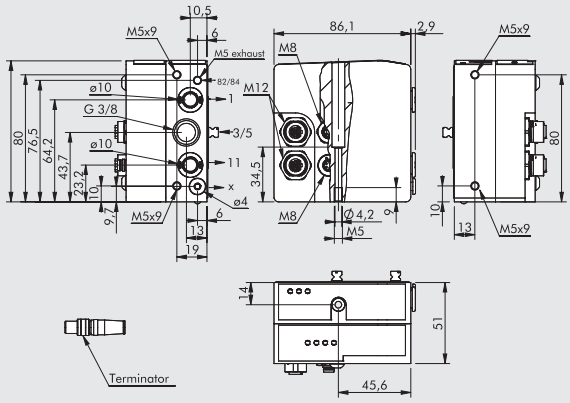

Code	Description	Weight [g]
0227302230	End-plate CM 1-11 Profinet IO OUTPUT	683

This end-plate allows for supplies to be differentiated:
port 2, port 4 and pilot supply
Note: terminator included

3 - O END-PLATE 1 Profinet IO OUTPUT

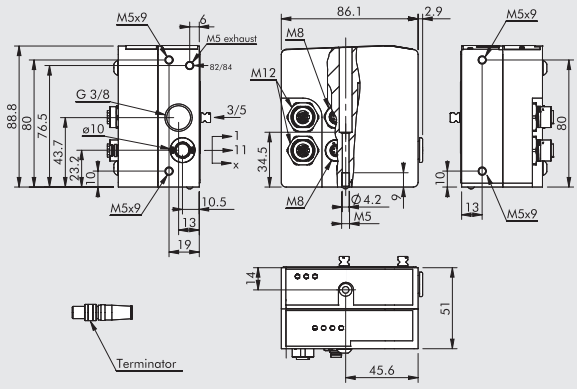

Code	Description	Weight [g]
0227302231	End-plate CM 1 Profinet IO OUTPUT	686

Note: terminator included

2 - I/O END-PLATE 1-11 Profinet IO INPUT/OUTPUT

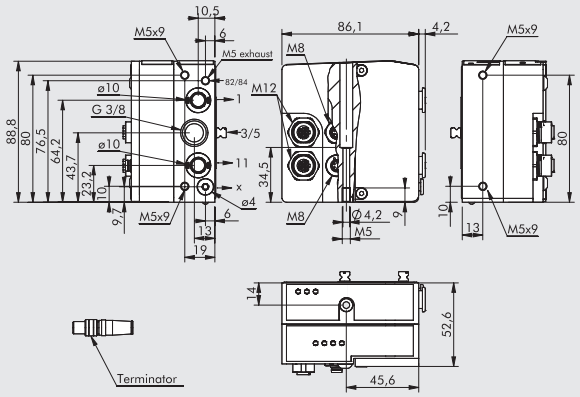

Code	Description	Weight [g]
0227302232	End-plate CM 1-11 Profinet IO IN/OUT	643

This end-plate allows for supplies to be differentiated:
port 2, port 4 and pilot supply
Note: terminator included

3 - I/O END-PLATE 1 Profinet IO INPUT/OUTPUT

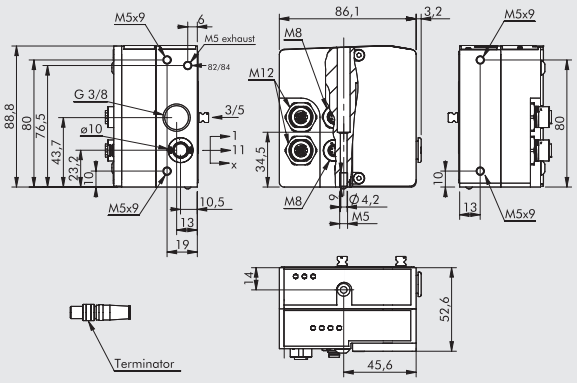

Code	Description	Weight [g]
0227302233	End-plate CM 1 Profinet IO IN/OUT	645

Note: terminator included

M8 CONNECTOR FOR POWER SUPPLY

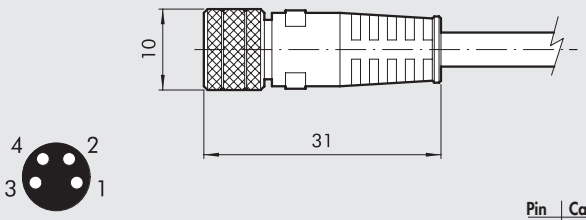

Pin	Cable colour
1	brown
2	white
3	blue
4	black

Code	Description
0240009037	M8 connector for power supply wire 5 m

M12 PLUG

Code	Description
0240009040	Plug M12

M12 BUS CONNECTOR, D-CODED

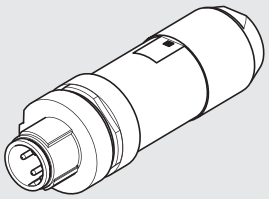

Code	Description
0240005051	M12 BUS connector, D-coded

BUS CABLE

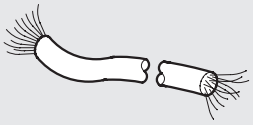

Code	Description
0240005220	BUS cable L = 20 m

Note: Can be used for BUS units in the EtherNet family (Profinet IO, EtherCAT, EtherNet/IP….)

STRAIGHT CONNECTOR FOR M12-M12 BUS, D-CODED

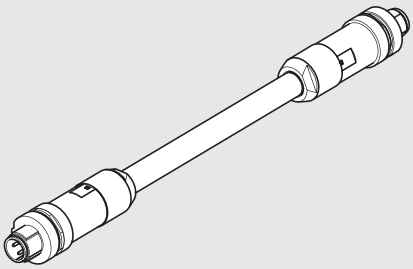

Code	Description
0240005103	Straight connector for M12-M12 BUS, D-coded, with 3 m cable
0240005105	Straight connector for M12-M12 BUS, D-coded, with 5 m cable
0240005110	Straight connector for M12-M12 BUS, D-coded, with 10 m cable

Note: Can be used for BUS units in the EtherNet family (Profinet IO, EtherCAT, EtherNet/IP….)

STRAIGHT CONNECTOR FOR M12 BUS, D-CODED

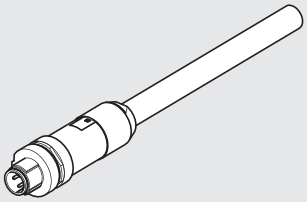

Code	Description
0240005093	Straight connector for M12 BUS, D-coded, with 3 m cable
0240005095	Straight connector for M12 BUS, D-coded, with 5 m cable
0240005100	Straight connector for M12 BUS, D-coded, with 10 m cable

Note: Can be used for BUS units in the EtherNet family (Profinet IO, EtherCAT, EtherNet/IP….)

RJ45 CONNECTOR

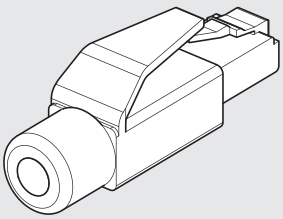

Code	Description
0240005050	RJ45 connector with 4 contacts according to IEC 60 603-7

NOTES

CM + EtherCAT

The CM + EtherCAT system has been designed with a pneumatic input end-plate that can contain all the electronic equipment, indicators and connectors.
This system is very compact and sturdy and is housed in a thick aluminium body that protects sensitive components from impact and falls.
The end-plate is available in two electric versions: one handling up to 64 solenoids (64 OUTs) and one handling up to 64 solenoids (64 OUTs) and 32 inputs (32 INs). Grounding is recommended to protect the electronic circuit against electric or electrostatic charges.
N.B. For the system to handle more than 32 pilots (33 to 64), it must be made up of valves bearing a label marked 64. If one or more valves are not marked 64, each island cannot handle more than 32 pilots.

TECHNICAL DATA	
Field buses	EtherCAT - 100 Mbit/s - Full-duplex - Supports auto-negotiation
Factory settings	Module name: Cmseries
	Address IP 0.0.0.0
Addressing	Software DCP
Voltage range	24VDC ± 10%
Maximum number of pilots (Out)	64
Maximum number of valves	64 (same as the max. no. of pilotos)
Maximum number of inputs (INs)	32
Icc bus supply current	Nominal Icc 120 mA - Instantaneous Icc (< 2 ms) 450 mA
Icc valve supply current	Instantaneous Icc (< 2 ms) 900 mA
Maximum absorption of a valve island with 64 monostable valves	Nominal Icc with 900 mA OFF valves – nominal Icc with 2700 mA ON valves
Protections	Module protected against overload and polarity reversal. Outputs protected against overloads and short-circuits
Connections	Field bus: 2 M12 Female, D-coded, internal switch
	supply: M8 4 pin
	input: M8 3 pin
BUS diagnostics	Using local LEDs and software messages
	Outputs: using local LEDs and status bytes
	Inputs: using local LEDs and status bytes
	N.B.: Refer to the user manual for a detailed description
Data bit value	0 = not enabled
	1 = enabled
Output status in the absence of communication	Disabled
See page 5 for general technical data	

COMPONENTS

① Exhaust - Solenoid pilot 82/84
② Valve supply - port 1
③ Threaded connection of exhausts 3/5
④ Valve supply - port 11
⑤ Electrical control supply X
⑥ Blind end-plate
⑦ Screw for valve wall-mounting
⑧ ⑨ ⑩ Utility port for pipe Ø 4, 6 or 8 mm
⑪ Manual control
⑫ LED (LED on, solenoid valve energised)
⑬ Pneumatic symbol
⑭ Identification of the monostable or bistable manual control
⑮ Valve ordering code
⑯ Valve identification code
⑰ Blank space for valve number
⑱ CM EtherCAT end-plate
⑲ 64 = when present, it means that the valve is suitable for installation on islands with a field bus with up to 64 pilots, otherwise the limit is 32 pilots.

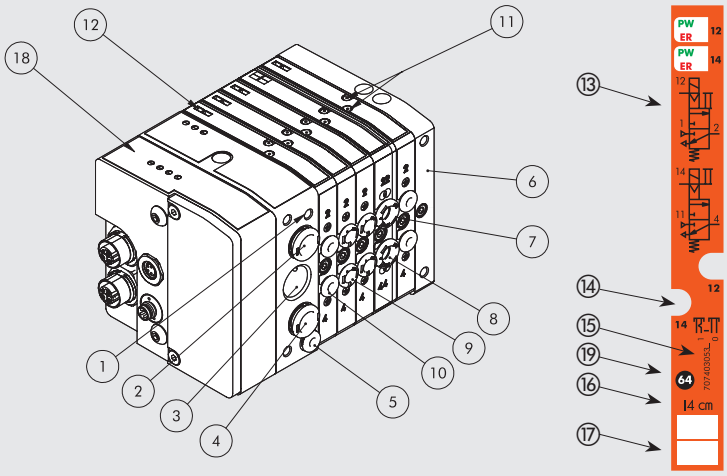

VALVE ISLAND CONFIGURATION

The numbers permit rapid identification of the function and assembly position of the single elements represented as follows.

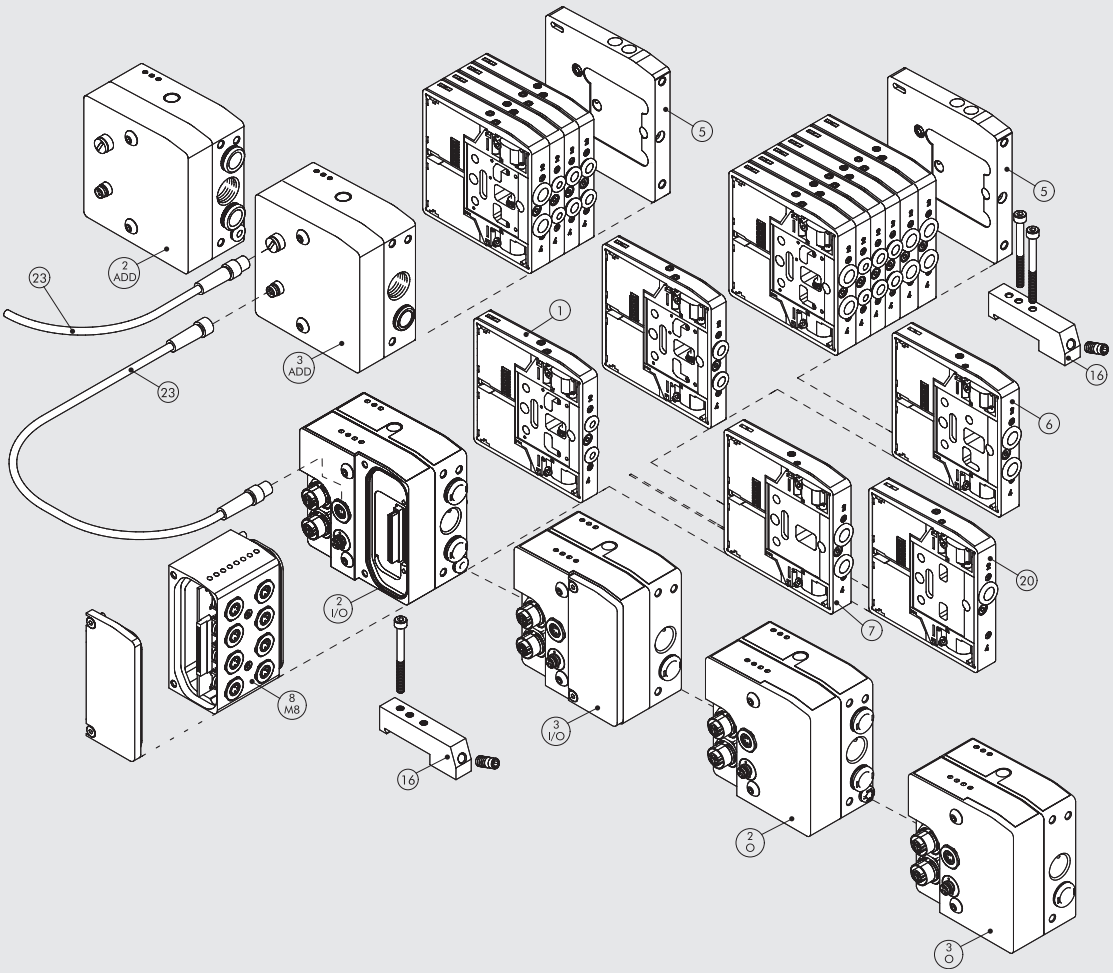

WIRING DIAGRAM

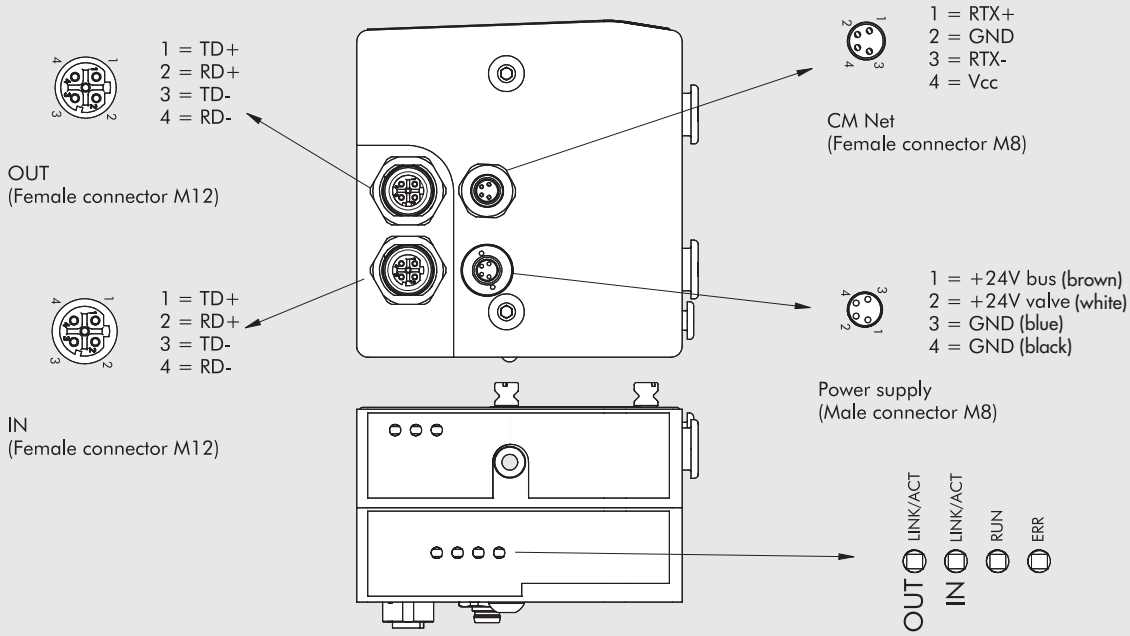

2 - O END-PLATE 1-11 EtherCAT OUTPUT

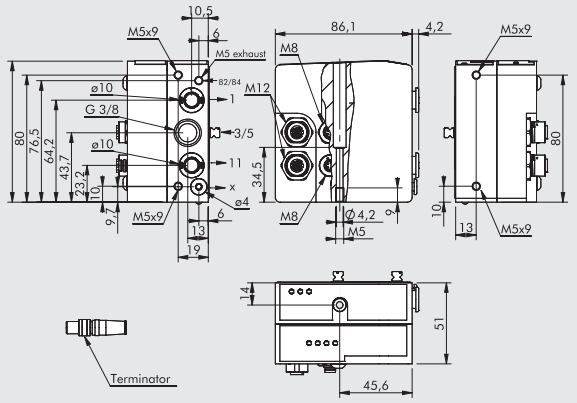

Code	Description	Weight [g]
0227302234	End-plate CM 1-11 EtherCAT OUTPUT	683

This end-plate allows for supplies to be differentiated:
port 2, port 4 and pilot supply
Note: terminator included

3 - O END-PLATE 1 EtherCAT OUTPUT

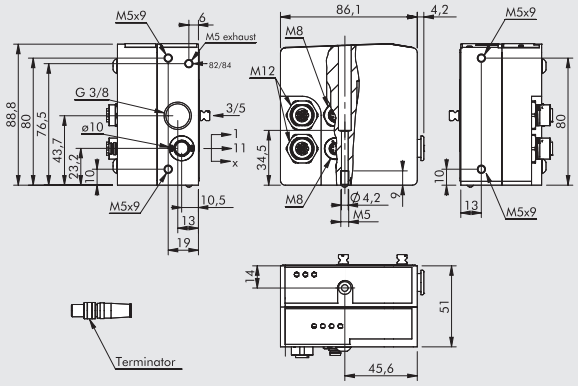

Code	Description	Weight [g]
0227302235	End-plate CM 1 EtherCAT OUTPUT	686

Note: terminator included

2 - I/O END-PLATE 1-11 EtherCAT INPUT/OUTPUT

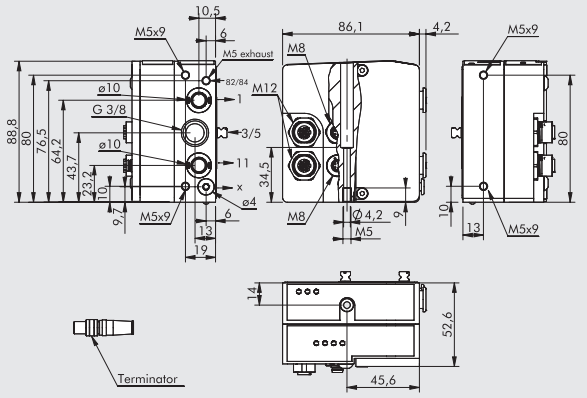

Code	Description	Weight [g]
0227302236	End-plate CM 1-11 EtherCAT IN/OUT	643

This end-plate allows for supplies to be differentiated:
port 2, port 4 and pilot supply
Note: terminator included

3 - I/O END-PLATE 1 EtherCAT INPUT/OUTPUT

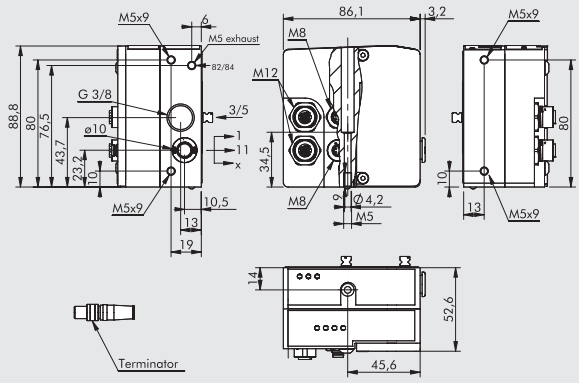

Code	Description	Weight [g]
0227302237	End-plate CM 1 EtherCAT IN/OUT	645

Note: terminator included

M8 CONNECTOR FOR POWER SUPPLY

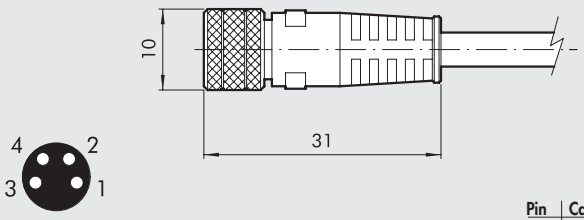

Pin	Cable colour
1	brown
2	white
3	blue
4	black

Code	Description
0240009037	M8 connector for power supply wire 5 m

M12 PLUG

Code	Description
0240009040	Plug M12

M12 BUS CONNECTOR, D-CODED

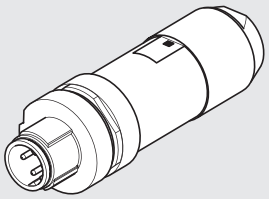

Code	Description
0240005051	M12 BUS connector, D-coded

BUS CABLE

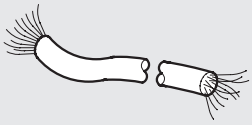

Code	Description
0240005220	BUS cable L = 20 m

Note: Can be used for BUS units in the EtherNet family (Profinet IO, EtherCAT, EtherNet/IP….)

STRAIGHT CONNECTOR FOR M12-M12 BUS, D-CODED

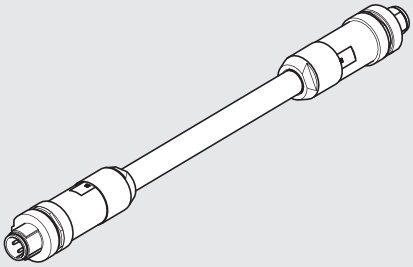

Code	Description
0240005103	Straight connector for M12-M12 BUS, D-coded, with 3 m cable
0240005105	Straight connector for M12-M12 BUS, D-coded, with 5 m cable
0240005110	Straight connector for M12-M12 BUS, D-coded, with 10 m cable

Note: Can be used for BUS units in the EtherNet family (Profinet IO, EtherCAT, EtherNet/IP….)

STRAIGHT CONNECTOR FOR M12 BUS, D-CODED

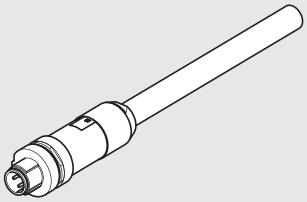

Code	Description
0240005093	Straight connector for M12 BUS, D-coded, with 3 m cable
0240005095	Straight connector for M12 BUS, D-coded, with 5 m cable
0240005100	Straight connector for M12 BUS, D-coded, with 10 m cable

Note: Can be used for BUS units in the EtherNet family (Profinet IO, EtherCAT, EtherNet/IP….)

RJ45 CONNECTOR

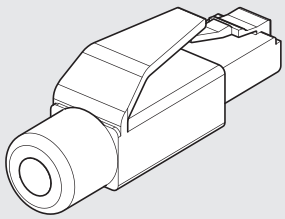

Code	Description
0240005050	RJ45 connector with 4 contacts according to IEC 60 603-7

NOTES

CM + CANopen

The CM+CANopen system has been designed with a pneumatic input end-plate that can contain all the electronic equipment, indicators and connectors. This system is very compact and sturdy and is housed in a thick aluminium body that protects sensitive components impact and falls.
The end-plate is available in two electric versions: one handling up to 64 solenoids (64 OUTs) and one handling up to 64 solenoids (64 OUTs) and 32 inputs (32 INs).
Grounding is recommended to protect the electronic circuit against electric or electrostatic charges.
N.B. For the system to handle more than 32 pilots (33 to 64), it must be made up of valves bearing a label marked 64. If one or more valves are not marked 64, each island cannot handle more than 32 pilots.

TECHNICAL DATA

Field buses	CANopen - Complies with CiA DS401 specifications
Factory settings	Module name: Cmseries
	Address 4
Addressing	Hardware via dip Switch
Voltage range	24VDC ± 10%
Maximum number of pilots (Out)	64
Maximum number of valves	* 64 (same as the max. no. of pilotos)
Maximum number of inputs (INs)	32
Icc bus supply current	Nominal Icc 30 mA - Instantaneous Icc (< 5 ms) 640 mA
Icc valve supply current	Instantaneous Icc (< 5 ms) 1100 mA
Maximum absorption of a valve island with 64 monostable valves	Nominal Icc with 900 mA OFF valves – nominal Icc with 2700 mA ON valves
Protections	Module protected against overload and polarity reversal. Outputs protected against overloads and short-circuits
Connections	Field bus: M12 Male inputs, 5 pins, A-coded; M12 Female outputs, 5 poles, A-coded
	supply: M8 4 pin
	input: M8 3 pin
BUS diagnostics	Using local LEDs and software messages
	Outputs: using local LEDs and status bytes
	Inputs: using local LEDs and status bytes
	N.B.: Refer to the user manual for a detailed description
Data bit value	0 = not enabled
	1 = enabled
Output status in the absence of communication	Disabled

*** N.B.: In case of "slaves" islands, the CANopen "clever center" can contain up to 34 valves (pilots can be even up to 64).**

See page 5 for general technical data

COMPONENTS

① Exhaust - Solenoid pilot 82/84
② Valve supply - port 1
③ Threaded connection of exhausts 3/5
④ Valve supply - port 11
⑤ Electrical control supply X
⑥ Blind end-plate
⑦ Screw for valve wall-mounting
⑧ ⑨ ⑩ Utility port for pipe Ø 4, 6 or 8 mm
⑪ Manual control
⑫ LED (LED on, solenoid valve energised)
⑬ Pneumatic symbol
⑭ Identification of the monostable or bistable manual control
⑮ Valve ordering code
⑯ Valve identification code
⑰ Blank space for valve number
⑱ CM CANopen end-plate
⑲ 64 = when present, it means that the valve is suitable for installation on islands with a field bus with up to 64 pilots, otherwise the limit is 32 pilots.

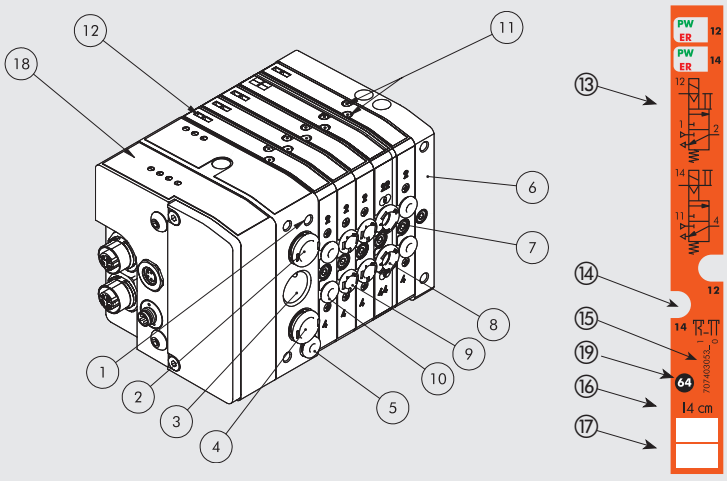

VALVE ISLAND CONFIGURATION

The numbers permit rapid identification of the function and assembly position of the single elements represented as follows.

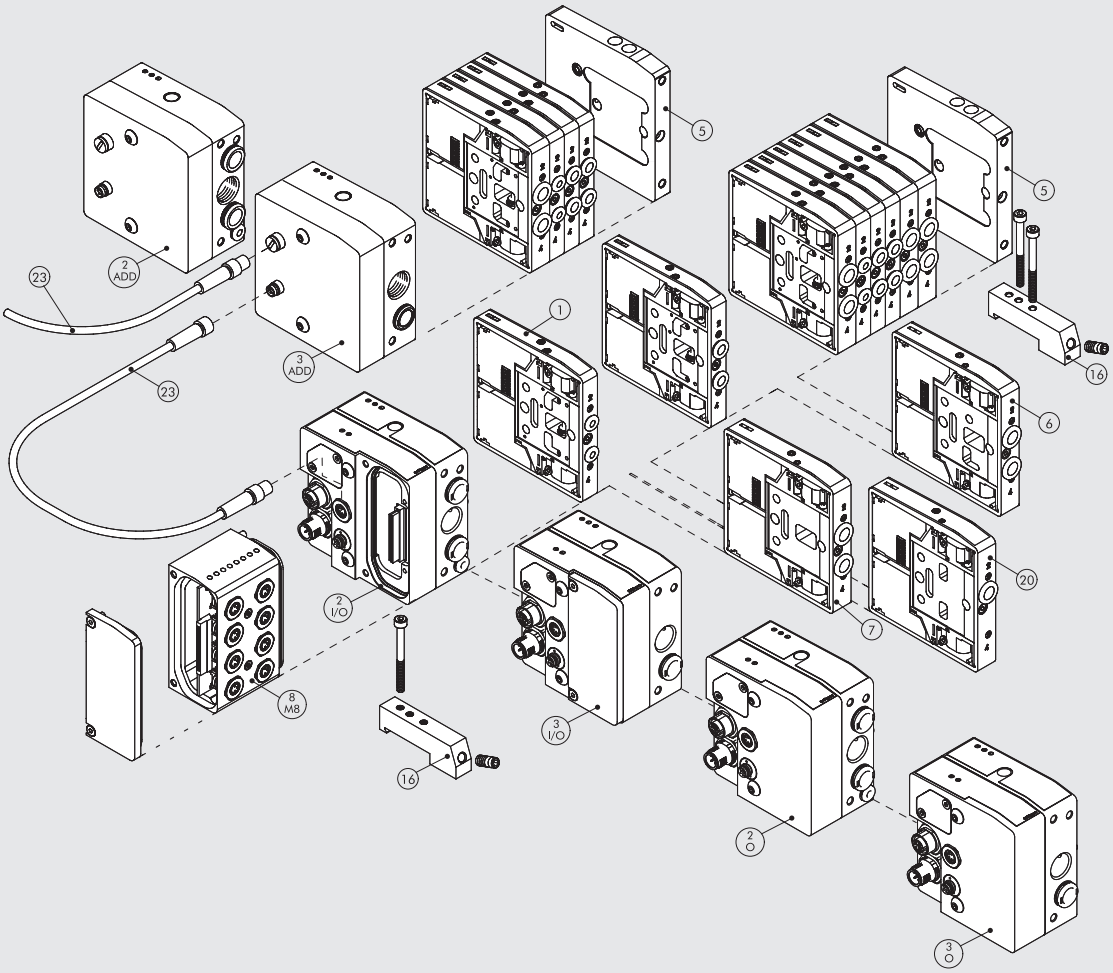

WIRING DIAGRAM

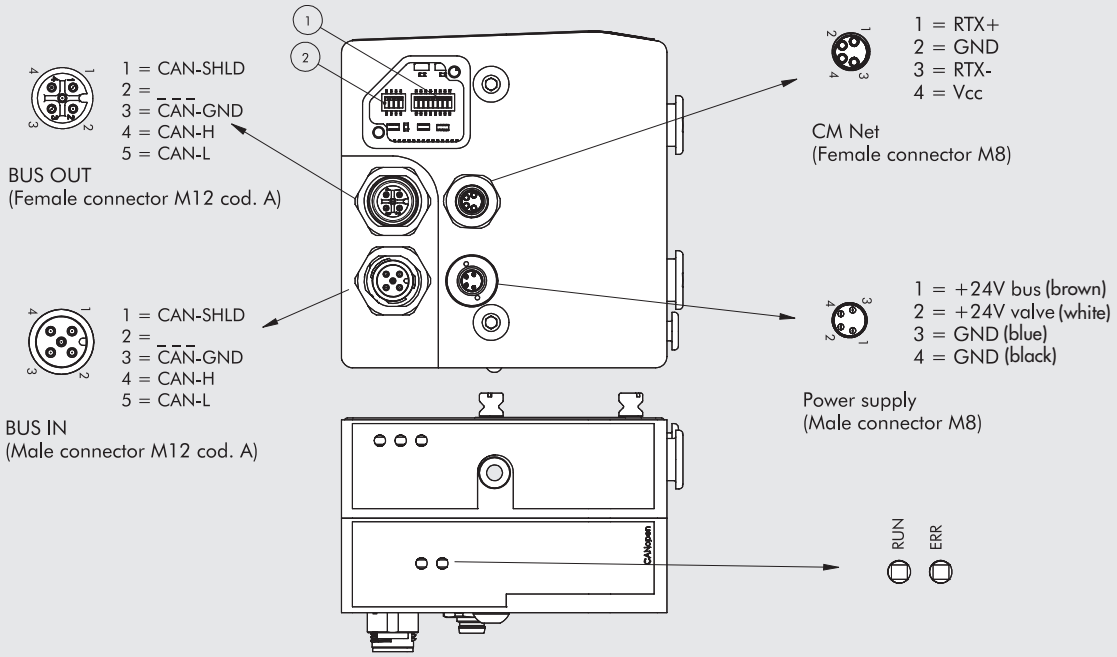

2 - O END-PLATE 1-11 CANopen OUTPUT

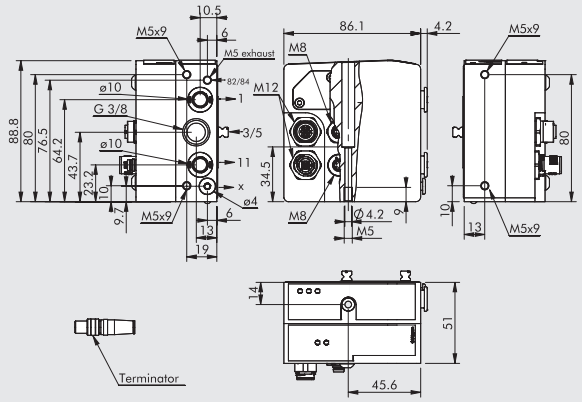

Code	Description	Weight [g]
0227302238	End-plate CM 1-11 CANopen OUTPUT	678

This end-plate allows for supplies to be differentiated:
port 2, port 4 and pilot supply
Note: terminator included

3 - O END-PLATE 1 CANopen OUTPUT

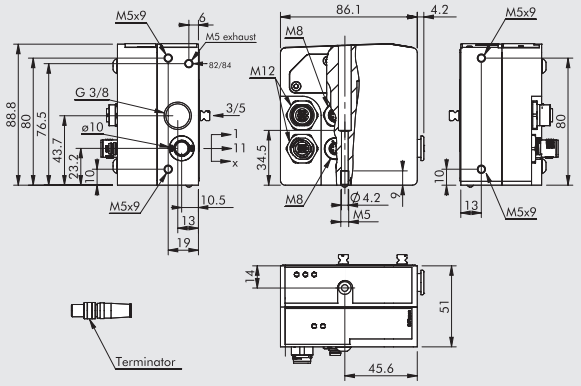

Code	Description	Weight [g]
0227302239	End-plate CM 1 CANopen OUTPUT	680

Note: terminator included

2 - I/O END-PLATE 1-11 CANopen INPUT/OUTPUT

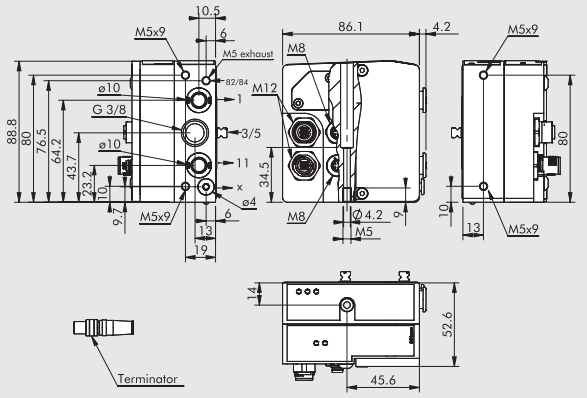

Code	Description	Weight [g]
0227302240	End-plate CM 1-11 CANopen IN/OUT	632

This end-plate allows for supplies to be differentiated:
port 2, port 4 and pilot supply
Note: terminator included

3 - I/O END-PLATE 1 CANopen INPUT/OUTPUT

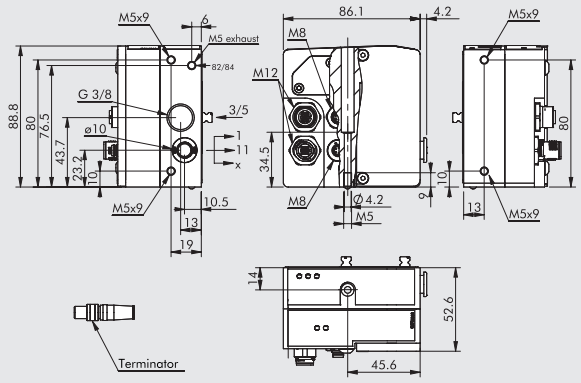

Code	Description	Weight [g]
0227302241	End-plate CM 1 CANopen IN/OUT	635

Note: terminator included

FEMALE CONNECTOR FOR CANopen BUS-IN

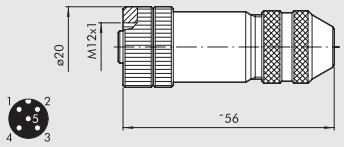

Code	Description
0240009055	M12 female connector, A-coded

MALE CONNECTOR FOR CANopen BUS-OUT

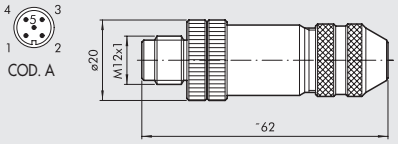

Code	Description
0240009038	M12 male connector, A-coded

CABLE FOR CANopen BUS

Code	Description
0240005250	Cable for CANopen bus 20 m

NOTES

CM - VALVES, INTERMEDIATES ELEMENTS AND ACCESSORIES

CM valve can be included in islands with any available input terminal.
The same valve can be connected to the multiple connection end-plate and all the field bus end-plates.

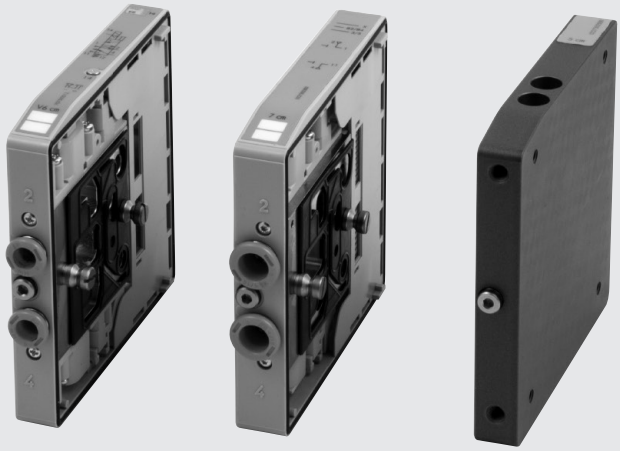

MANUAL CONTROLS

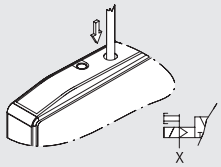

MONOSTABLE OVERRIDE PORT 2
servo-assisted

- Press and hold the manual control in position (not necessary for bistable type K valve)
- Release the manual control:
  - The manual control returns to the home position.
  - Valves type I, W, L, V and O reposition.
  - The type K valve remains switched

N.B.: The pilot power supply X must be present.

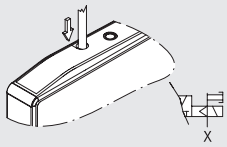

MONOSTABLE OVERRIDE PORT 4
servo-assisted

- Press and hold the manual control in position (not necessary for bistable type K valve)
- Release the manual control:
  - The manual control returns to the home position.
  - Valves type I, W, L, V and O reposition.
  - The type K valve remains switched

N.B.: The pilot power supply X must be present.

- The reference code for the monostable control ends in "0".

Example: 707403053 – 1 / 0

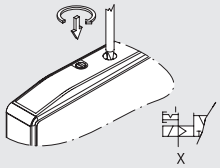

BISTABLE OVERRIDE PORT 2
servo-assisted

- Press the manual control right in then turn it clockwise 90 degrees and Leave it in position.
- Rotate the manual control 90 degrees anticlockwise, and then release it.
  - The manual control returns to the home position.
  - Valves type I, W, L, V and O reposition.
  - The type K valve remains switched

N.B.: The pilot power supply X must be present.

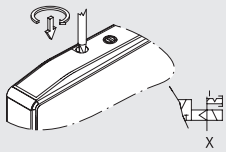

BISTABLE OVERRIDE PORT 4
servo-assisted

- Press the manual control right in then turn it 90 degrees clockwise and Leave it in position.
- Rotate the manual control 90 degrees anticlockwise, and then release it:
  - The manual control returns to the home position.
  - Valves type I, W, L and O reposition.
  - The type K valve remains switched

N.B.: The pilot power supply X must be present.

- The reference code for the monostable control ends in "1".

Example: 707403053 – 1 / 0

① VALVE DIMENSIONS CM Ø 4

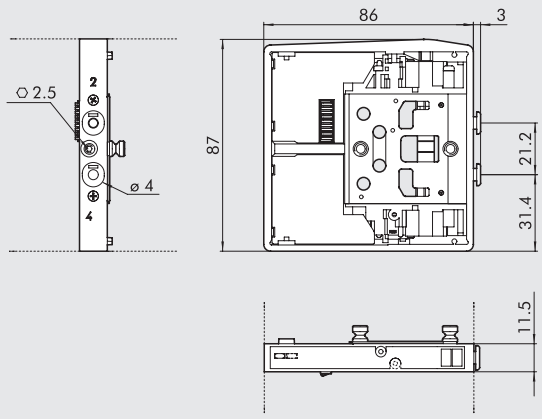

Symbol		Code	Manual control	Weight [g]
CM I4	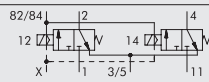	7074030530	monostable	130
		7074030531	bistable	
CM W4	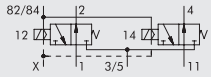	7074030630	monostable	130
		7074030631	bistable	
CM L4	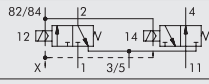	7074030730	monostable	130
		7074030731	bistable	
CM V4	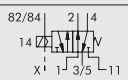	7074030130	monostable	115
		7074030131	bistable	
CM K4	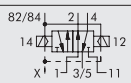	7074030110	monostable	130
		7074030111	bistable	
CM O4	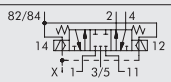	7074030210	monostable	130
		7074030211	bistable	

① VALVE DIMENSIONS CM Ø 6

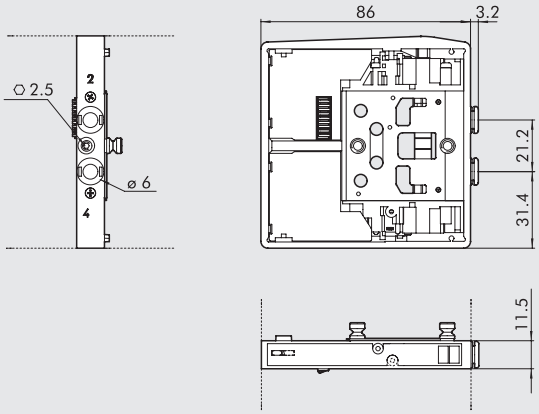

Symbol	Code	Manual control	Weight [g]
CM I6	7075030530	monostable	130
	7075030531	bistable	
CM W6	7075030630	monostable	130
	7075030631	bistable	
CM L6	7075030730	monostable	130
	7075030731	bistable	
CM V6	7075030130	monostable	115
	7075030131	bistable	
CM K6	7075030110	monostable	130
	7075030111	bistable	
CM O6	7075030210	monostable	130
	7075030211	bistable	

① VALVE DIMENSIONS CM Ø 8

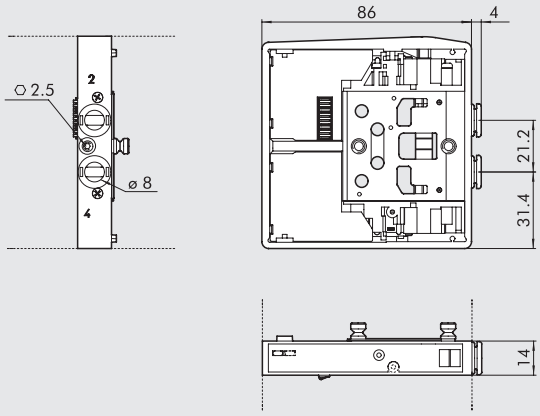

Symbol	Code	Manual control	Weight [g]
CM I8	7076030530	monostable	140
	7076030531	bistable	
CM W8	7076030630	monostable	140
	7076030631	bistable	
CM L8	7076030730	monostable	140
	7076030731	bistable	
CM V8	7076030130	monostable	130
	7076030131	bistable	
CM K8	7076030110	monostable	140
	7076030111	bistable	
CM O8	7076030210	monostable	140
	7076030211	bistable	

2 - ADD ADDITIONAL END-PLATE 1-11

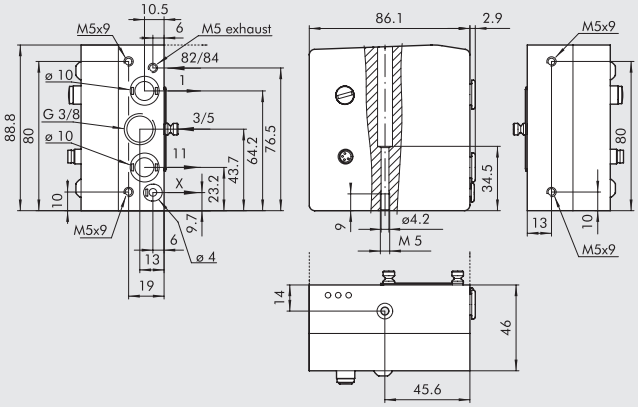

Code	Description	Weight [g]
0227302224	End-plate CM kit 1-11 ADD	770

This end-plate allows for supplies to be differentiated:
port 2, port 4 and pilot supply

3 - ADD ADDITIONAL END-PLATE 1

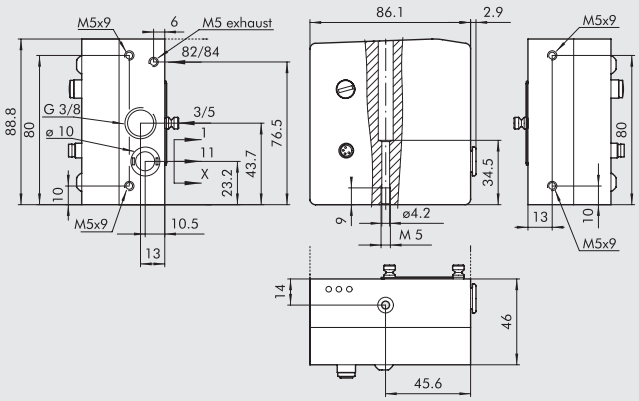

Code	Description	Weight [g]
0227302226	End-plate CM kit 1 ADD	770

WIRING DIAGRAM FOR THE ADDITIONAL TERMINAL

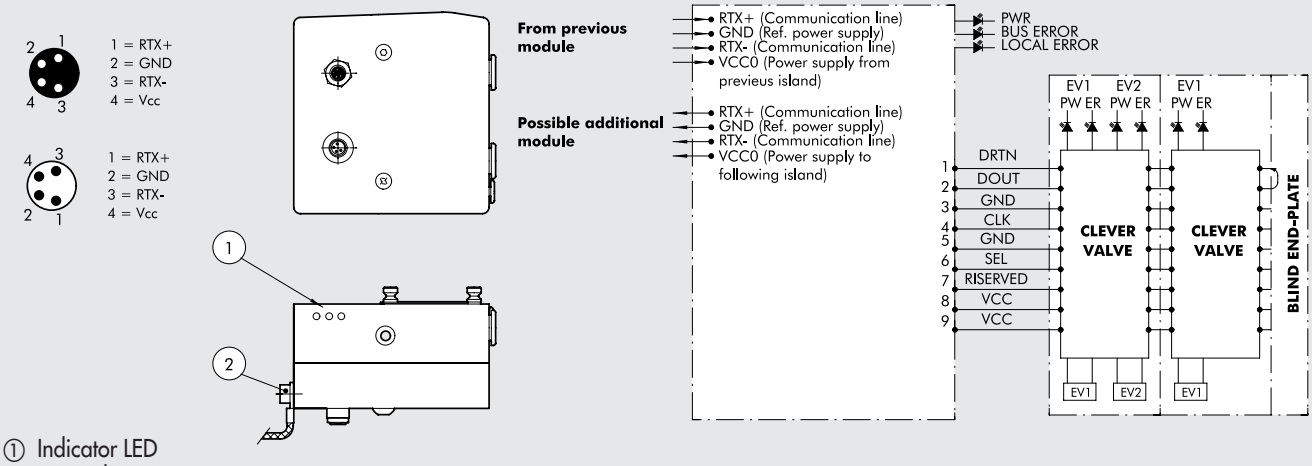

① Indicator LED
② Grounding

⑤ BLIND EN-PLATE

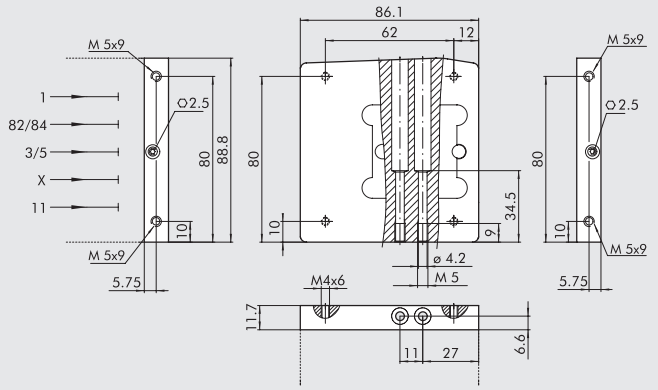

Code	Description	Weight [g]
0227302500	Blind en-plate CM	230

⑥ INTERMEDIATE THROUGHT

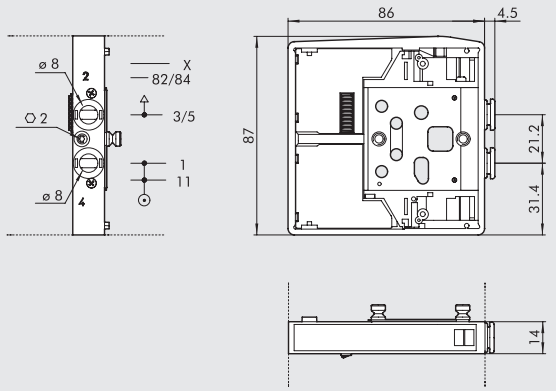

Code	Description	Weight [g]
0227302301	Intermediate throught CM	120

⑦ INTERMEDIATE BLIND

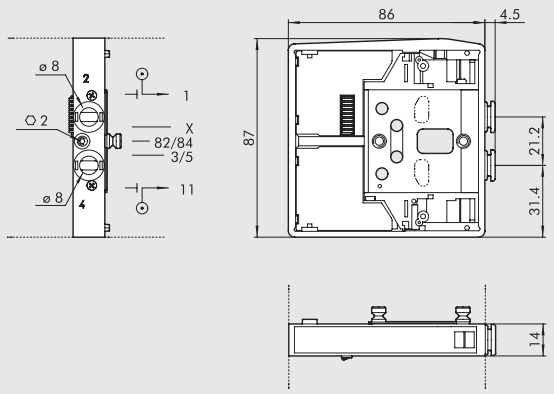

Code	Description	Weight [g]
0227302302	Intermediate blind CM	117

⑳ INTERMEDIATE EXHAUST SWITCH

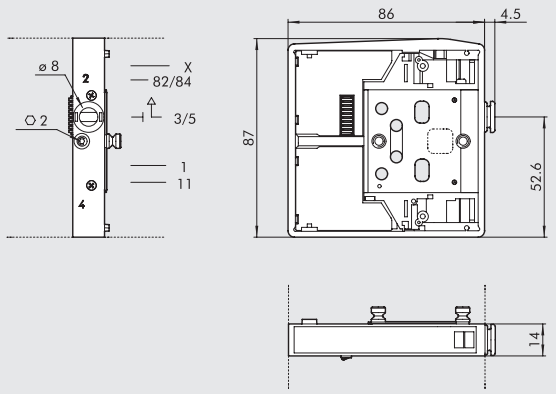

Code	Description	Weight [g]
0227302303	Intermediate exhaust switch CM	125

⑯ CONNECTION BRACKETS ON DIN BAR

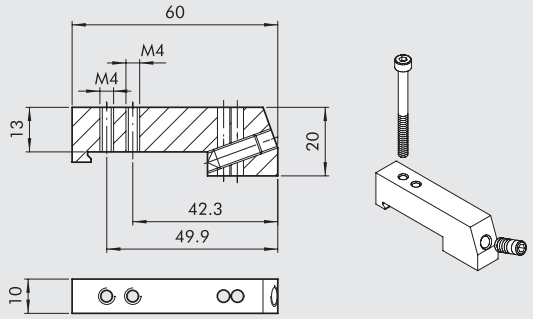

Code	Description	Weight [g]
0227301600	Connection brackets on din bar HDM/CM	30

Supplied complete with one M4x45 screws and one grub screw
Individually packed

SILENCER FOR FITTING, Ø 8

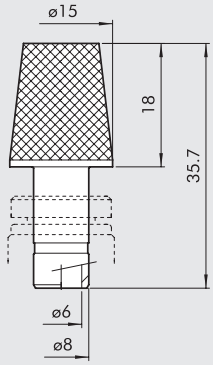

Code	Description	Weight [g]
W0970530084	Silencer for fitting, Ø 8	15

At the 3/5-exhaust port of the intermediate through reference 6
and the exhaust switch reference 20

8 - M8 8-INPUT M8 ADD-ON MODULE (for BUS) – INPUTs / OUTPUTs (for multi-pole connection)

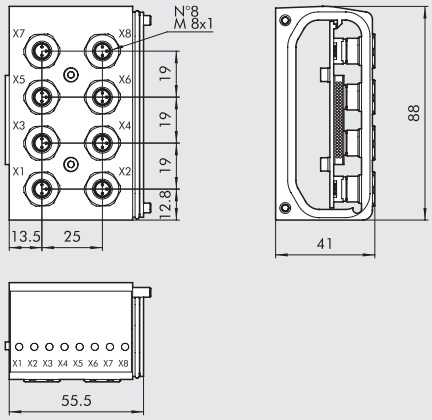

Code	Description	Weight [g]
0227302900	M8 8-input module CM	273

FIELD BUS CONNECTION		MULTI-POLE CONNECTION			
INPUT PNP 1 = + 24 VDC 3 = 0VDC 4 = INPUT		INPUT PNP 1 = + 24 VDC 3 = 0VDC 4 = INPUT		INPUT NPN 1 = + 24 VDC 3 = 0VDC 4 = INPUT	
		OUTPUT PNP 1 = + 24 VDC 3 = 0VDC 4 = INPUT		OUTPUT NPN 1 = + 24 VDC 3 = 0VDC 4 = INPUT	
		DIP SWITCH		DIP SWITCH	
		OUTPUT ANALOGIC	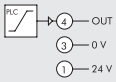	INPUT ANALOGIC	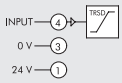

M8 PLUG

Code	Description
0240009039	Plug M8

M8 INPUT CONNECTOR

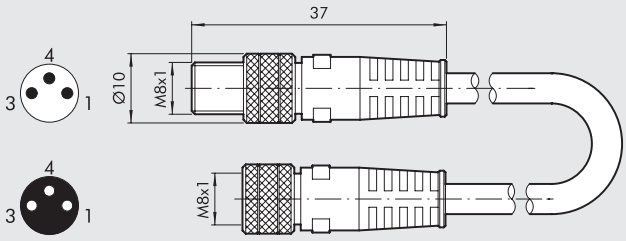

Pin	Cable colour
1	Brown
3	Blue
4	Black

Code	Description
0240009009	M8-M8 straight connector with 3 m cable

23 M8 PREWIRED CONNECTOR FOR VALVE ISLANDS CONNECTIONS

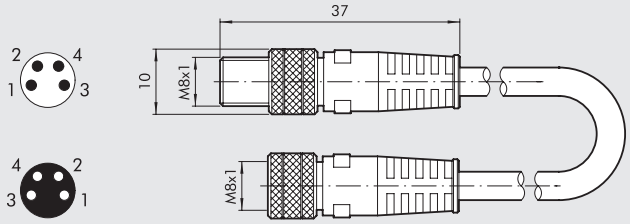

Pin	Cable colour
1	Brown
2	White
3	Blue
4	Black

Code	Description
0240005003	M8 prewired connector for valve islands conn. CM L = 5 m
0240005005	M8 prewired connector for valve islands conn. CM L = 1 m
0240005006	M8 prewired connector for valve islands conn. CM L = 3 m
0240005008	M8 prewired connector for valve islands conn. CM L = 10 m

DISTRIBUTORS M8 INPUT CONNECTOR

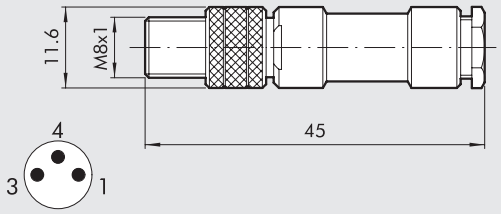

Code	Description
0240009010	M8 3-pin straight connector

GRUB SCREW KIT

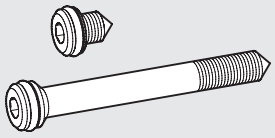

Code	Description
0227301800	Grub screw for Multimach HDM/CM

Comes 1 + 1 packs

R17 - DISASSEMBLY KEY

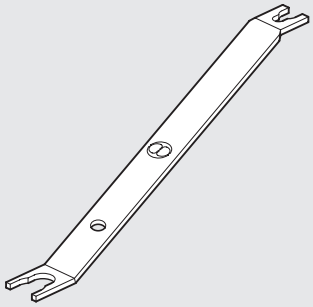

Lenght = 140 mm

Code	Description	Ø Tube	Tube
2L17001	RL17	from Ø 3 to Ø 10	For R fitting and Fox fitting

NOTES